University of Worcester

Institute of Education

Mathematics Equivalence Test

Sample Papers

There are two papers, Non-calculator and Calculator, each worth 50 marks.

These papers reflect the current National Curriculum and GCSE for England.

You are assessed across the two papers.

Paper 1

You may NOT use a calculator.

Time: 1 hour

Answer all questions in the answer spaces.

Show your working where relevant.

The total number of marks for this paper is 50.

You may use pen, pencil and appropriate mathematical equipment (ruler, angle measurer (protractor), compasses.

Diagrams are not to scale unless the question specifies the scale.

1 Here are some numbers.

19·2 12·9 –8·8 –1·7 4·6 –8·7

Write the numbers in pairs so that the sum of the numbers in each pair is the same.

……. and ……. , ……. and ……. , ……. and …….

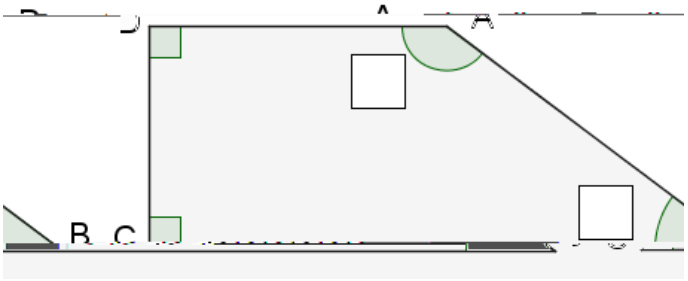

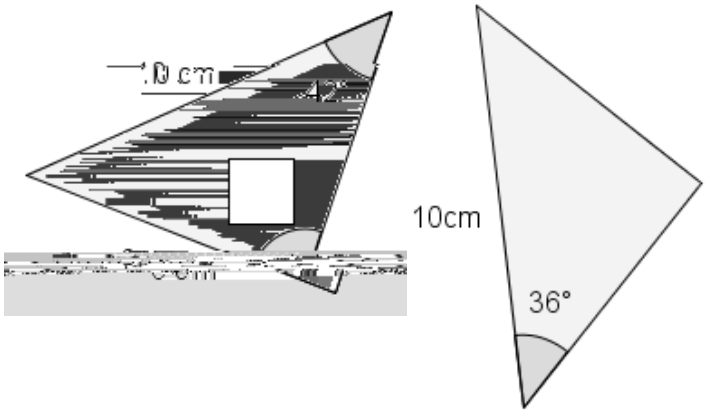

7 Dave wants to find out whether toast always lands butter side down.

10 40 males and 35 females took an online test.
This box and whisker diagram summarises the results of their scores.

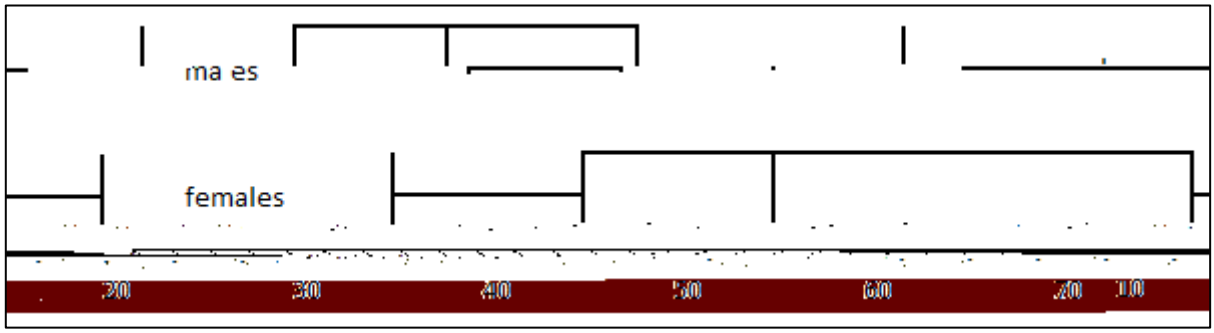

(a) Tick the sentences that are true for these data.

Males scored a higher maximum score than females. ☐

Females had a higher median than males. ☐

The lower quartile for males is 22. ☐

Scores for females are more consistent than for males. ☐ [2]

(b) Complete these sentences.

The interquartile range for females is …… .

The median score for males is …… . [2]

11 Find the perimeter of this semicircle, giving your answer in terms of .

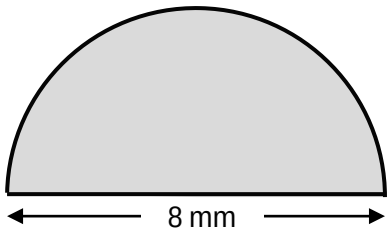

…… cm [3]

12 Work out

(a) $4 - \div -$

…… [2]

(b) 300 as a product of prime factors.

…… [2]

13 The diagram shows a cuboid with dimensions 5 cm, 6 cm and 8 cm.

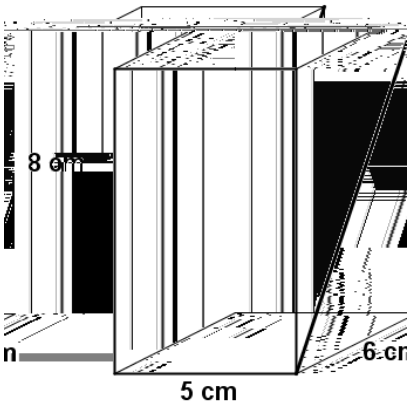

(a) Work out the volume of the cuboid.

…… cm^3 [2]

(b) A diagonal is drawn across one face as shown.

Work out the length of the diagonal.

…… cm [2]

END OF PAPER 1 – Now email Ch .ut@ wac.k for a wk